(No Model.)

L. A. GREENE.

DEVICE FOR HITCHING OR UNHITCHING HORSES.

No. 551,762. Patented Dec. 24, 1895.

Fig. 1.

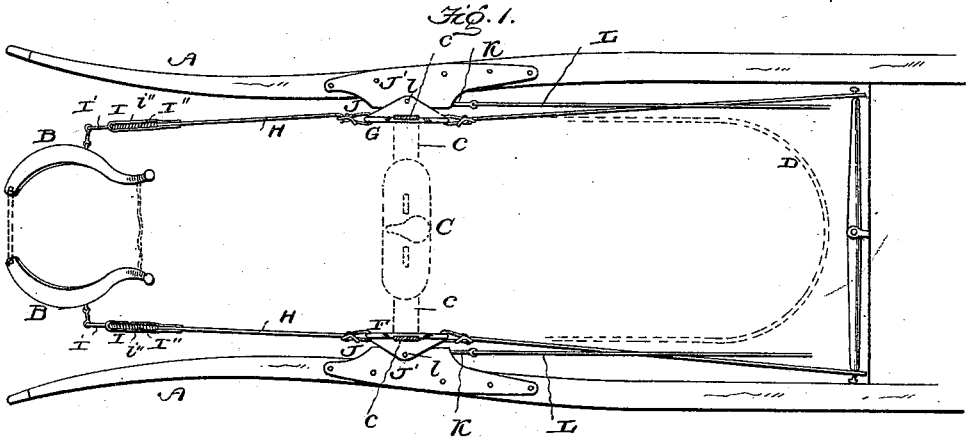


Fig. 2.

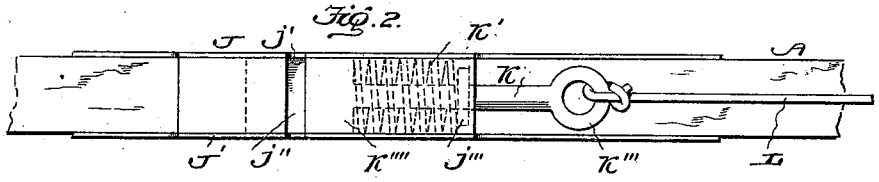


Fig. 3.

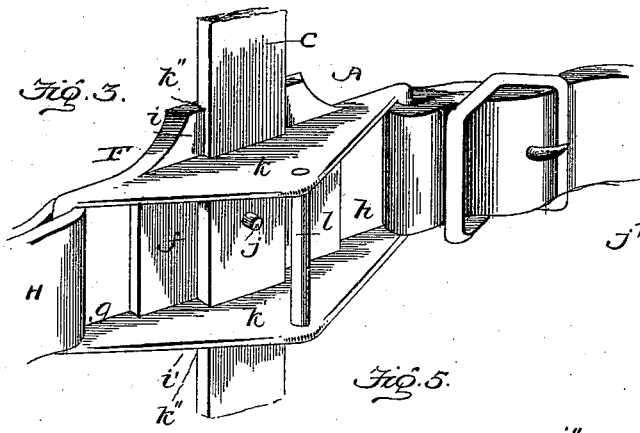


Fig. 4

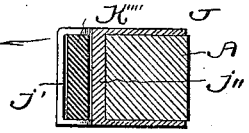


Fig. 5.

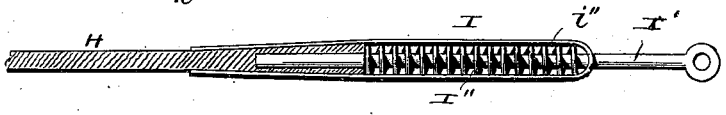
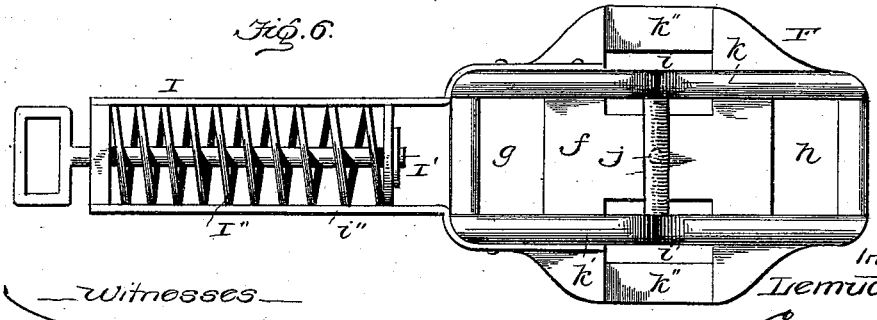


Fig. 6.



Witnesses
A. E. Gaskill
H. E. Bernhard.

Inventor
Lemuel A. Greene.
By Edson Bros.
Atty's.

ANDREW B. GRAHAM, PHOTO-LITHO WASHINGTON, D.C.

UNITED STATES PATENT OFFICE.

LEMUAL A. GREENE, OF GREERS, SOUTH CAROLINA.

DEVICE FOR HITCHING OR UNHITCHING HORSES.

SPECIFICATION forming part of Letters Patent No. 551,762, dated December 24, 1895.

Application filed September 14, 1895. Serial No. 562,560. (No model.)

To all whom it may concern:

Be it known that I, LEMUAL A. GREENE, a citizen of the United States, residing at Greers, in the county of Greenville and State of South Carolina, have invented certain new and useful Improvements in Devices for Hitching or Unhitching Horses; and I do hereby declare the following to be a full, clear, and exact description of the invention, such as will enable others skilled in the art to which it appertains to make and use the same.

My invention relates to improvements in devices for attaching horses to and detaching them from vehicles; and the objects that I have in view are, first, to provide a simple, inexpensive and easily-operated contrivance by which horses may be quickly and securely hitched to the thills of a vehicle and as quickly unhitched therefrom; secondly, to provide an improved form of buckle to which are connected the trace, the backing strap, and the belly-band, and which buckle is constructed to fit the clasp on the thill in a manner to prevent the thills from rising, to properly transmit the draft from the traces to the thills, and to pull back on the thills; thirdly, to provide an improved yielding draft appliance in the trace between the buckle and the hame so as to even up on the draft and lessen the strain on the horse's shoulder; and, fourthly, to provide means whereby the buckles may be disconnected from the thills while the driver is seated in the vehicle, so that in the event of a runaway or when the horse becomes unmanageable from any cause the animal may be instantly released.

With these ends in view and such others as pertain to a device of this character my invention consists in the novel combination of devices and in the peculiar construction and arrangement of parts which will be hereinafter fully described and claimed.

To enable others to more readily understand my invention, I have illustrated the same in the accompanying drawings, forming a part of this specification, in which—

Figure 1 is a plan view showing the harness and thills. Fig. 2 is a side elevation. Fig. 3 is a detail perspective view of the buckle, showing a part of the straps which are connected thereto. Fig. 4 is a detail sectional view of the clasp by which the buckle is connected detachably to the thill. Fig. 5 is a detail view of the spring-draft appliance in the trace between the buckle and the point of attachment to the hame. Fig. 6 is a detail view of a modified construction in which the draft-easing appliance is attached directly to the buckle instead of being attached to the hame, as in Fig. 1.

Like letters of reference denote corresponding parts in all the figures of the drawings, referring to which—

A A designate the thills of a carriage, wagon, or other vehicle. The harness consists of the ordinary hames B, the saddle C having the belly-band *c* and the breeching D, together with the other appurtenances which I do not deem necessary to illustrate or describe, because the details of the harness do not modify the action of my device for hitching and unhitching except as to the buckles F G, which are employed to connect the harness to the thills in lieu of the usual hold-back straps and traces.

The buckles F G are the same in construction, and they are arranged on opposite sides of the harness, so as to be connected to the thills A A. The buckles are shown by the detail view, Fig. 3 of the drawings, and each consists of the flat central plate *f*, having the loops *g*, *h*, and *i i'*, the central stud *j* projecting from the plate *f*, the double inclined plates *k k'*, and the cross-bar *l*. In practice all of these parts of the buckle are cast in a single piece for strength and simplicity of construction. The loops *g h* are arranged at opposite sides of the plate *f*, and the loops *i i'* extend from the plate *f* at right angles to the loops *g h*. The bars or plates *k k'* extend across the openings in the loops *i i'*, and the inner edges of these plates *k k'*, opposite the loop-openings, have the recesses or notches *k''* cut or formed therein for the purpose of better passing the belly-band *c* through the buckle. The double inclined plates *k k'* are arranged parallel to each other and they extend longitudinally of the buckle. The middle parts of these plates *k k'* project farther beyond the plane of the plate *f* than any other part, and the highest part of the plates *k k'* is joined by the cross-bar *l*. The belly-band *c* from the saddle passes through the notches *k''* in the plates *k k'* and the loops *i i'* of the buckle,

and in this band *c* fits the stud *j* on the plate *f*, thus holding the belly-band and the buckle securely together. The strap *c* has one end attached to the breeching D and its other end fastened to the loop *h* of the buckle. To the other loop *g* of the buckle is connected one end of the trace H.

In the harness as modified by me for the quick attachment and detachment of a horse I use two short traces which extend between the buckles F G and the hames B, the rear ends of the traces terminating at the buckles F G instead of being extended back and connected to the whiffletree of the vehicle.

The short traces H are provided with the yielding or spring draft-easing devices I I, which in the embodiment shown by Fig. 5 are arranged between the ends of the traces and the hames B B. Each draft-easer consists of the clip *i''*, having its free ends lapping over the end of the trace and secured thereto by rivets, or in any suitable way, a sliding bolt or rod I', and a coiled spring I''. The rod or bolt I' passes through an opening in the head of the clip, and one end of this rod or bolt has a head while its other end is furnished with an eye or hook whereby the rod or bolt may be connected to the hame. The coiled spring I'' is arranged within the clip and around the rod I', and one end of the spring bears against the head on the inner end of the bolt, while its other end bears against the doubled end of the clip.

On the thills A A are provided the clamps J J, which support the spring-controlled fastening-bolts K that are designed to engage with the buckles F G on the harness. Each clamp consists of the clip J', shaped to lap the upper and lower sides of the thill and to embrace against the inner side of said thill, the clip being fastened in place by screws, bolts, or in any other suitable way. At an intermediate point of its length the clip has a vertical slot *j'* cut transversely part way through it; and within the clip is provided the partition *j''*, which lies parallel to the inner wall of the clip to form a way or guide for the fastening-bolt K, said partition being furnished with a loop *j'''* near one end. The bolt K is fitted between the partition and the closed inner side of the clip, and it is passed through the loop *j'''*. One end of the bolt is adapted to play across the vertical slot *j'* in the clip, while the other end of the bolt is extended outside of the clip and provided with an eye or loop *k''*. Within the clip the bolt is furnished with a shoulder *k'''*, and around the shank of the bolt is placed the coiled spring K', one end of which spring bears against the shoulder *k''''* and the other end against the loop *j'''* on the fixed partition within the clip J'. The spring K' tends to normally force the bolt K across the slot *j'* in the clip J.

To provide convenient means for unhitching the horse while the driver is seated in the vehicle, I attach the cord L, or its equivalent, to the loops or eyes *k''* *k''* of the two spring-controlled bolts K K, and this cord L is extended back to the vehicle within convenient reach of the driver.

This being the construction of my hitching and unhitching device, the operation may be described as follows: The harness is fitted to the horse in the usual way, and the animal is placed between the thills A A, so that the buckles F G come opposite to the clips J' J'. The bolts K are withdrawn from across the slots *j'*, and the cross-bars *l l* are passed or fitted into the slots *j'* while the tapered plates *k k'* on the buckles are made to embrace the top and bottom sides of the clips J', after which the bolts K are released to enable their springs to again impel them across the vertical slots *j'* and thereby confine the cross-bars *l l* of the buckles in the slots of the clips J' J'. The horse pulls on the traces H, the buckles F G, the clips J, and the thills, and the spring draft-bolts I I equalize the strain and ease up the draft on the horse's shoulders. The plates *k k'* of the buckles F G embrace the clips J J, to prevent the thills from rising or dropping out of their proper positions. To unhitch the animal from the vehicle, it is only necessary to withdraw the bolts K K and release the buckles F G from the clips J' J'. The unhitching can be accomplished by a person standing alongside of the thills, or by pulling on the cord L by the driver seated in the vehicle. In case the animal runs away or becomes unmanageable from any cause, the cord L will be found a very convenient means for unhitching the animal almost instantly.

Although I have shown and described the draft-easing appliances as attached to the ends of the short traces and to the hames, yet I do not strictly confine myself to the specific arrangement of said appliances at this particular place, because I am aware that such draft-easing appliances may be attached to the buckles F G and the rear ends of the short traces. In Fig. 6 of the drawings I have shown the clip *i''* constructed to embrace the loop *g* of the buckle, and these parts may be fastened together in any suitable way—as, for instance, by a transverse belt. The spring-bolt *i'* extends beyond the closed end of the clip, and has a loop or eye to receive the rear end of the trace.

Having thus fully described my invention, what I claim as new, and desire to secure by Letters Patent, is—

1. The combination of the clips J' having the transverse slots therein, the buckles F, G, provided with the bars *k*, *k'* and the cross bar *l* to embrace the clip and fit in the slot therein, respectively, and the fastening bolts supported in the clips J' to confine the bars *l* in the slots of said clips, substantially as and for the purposes described.

2. In a device for hitching and unhitching, the buckles F, G, consisting of the plate *f* having a stud, the loops *g*, *h*, and *i*, *i'*, the ta-

pering bars k, k' extending across the loops i, i', and the cross bar l extending between the tapering bars $k\,k'$, in combination with a belly-band c passing through the loops $i\,i'$, and fitted over the stud on the plate f, the backing strap connected to the loop h, the short trace fastened to the loop g, and the clip J′ provided with a transverse slot and a spring controlled bolt, substantially as and for the purposes described.

3. In a device for hitching and unhitching, the combination of the slotted clips J′, J′, the buckles F, G, having the plates or bars $k\,k'$ and the cross bar l, the breeching straps fastened to the buckles, the belly band, the short traces, the spring controlled fastening bolts K K supported within the clips J′ and having their rear ends extended back through said clips, and the cord L connected to the extended ends of said bolts K, K, substantially as and for the purposes described.

4. The combination of the slotted clips J′ J′, the buckles F, G, provided with the plates or bars $k\,k'$ and the cross bar l, the spring bolts supported in the clips, a belly-band, a backing strap, the short traces H, and the draft-easing appliances I having the clip and the spring bolt, substantially as and for the purposes described.

In testimony whereof I affix my signature in presence of two witnesses.

LEMUAL A. GREENE.

Witnesses:
CHANEY LITTLEFIELD,
T. H. SHOCKLEY.