(No Model.)

D. M. FELTS.

WASHING MACHINE.

No. 425,127. Patented Apr. 8, 1890.

Fig. 1.

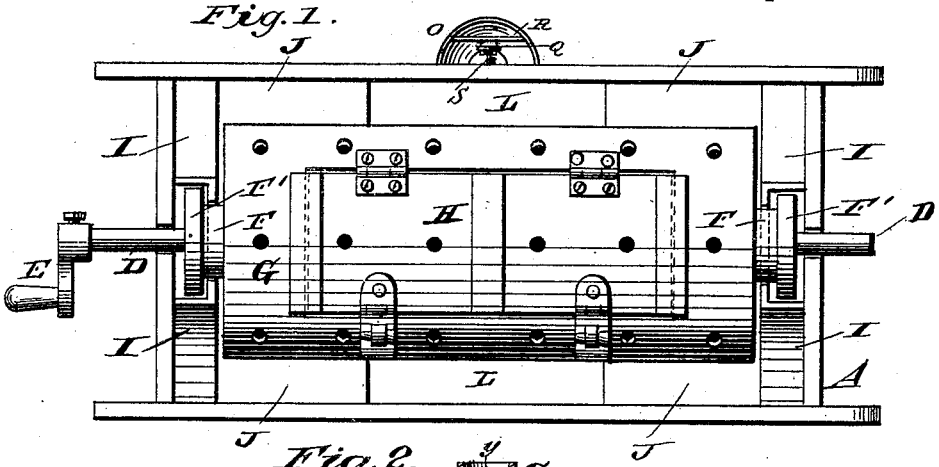

Fig. 2.

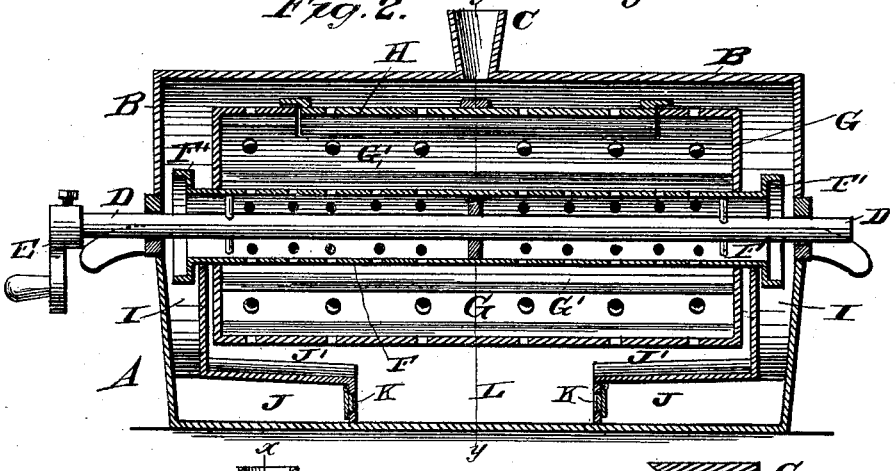

Fig. 3.

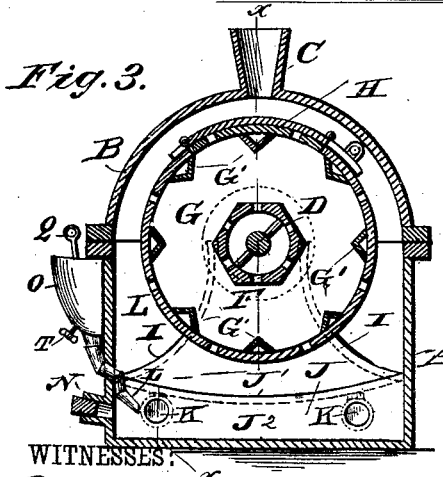

Fig. 4.

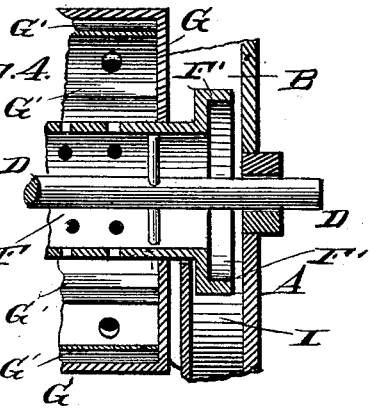

Fig. 5.

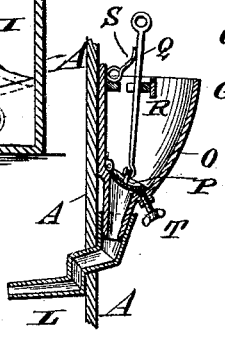

WITNESSES:

Phil C. Dirtrick

C. Bedgwick

INVENTOR:

D. M. Felts

BY Munn & Co

ATTORNEYS.

THE NORRIS PETERS CO., PHOTO-LITHO., WASHINGTON, D. C.

UNITED STATES PATENT OFFICE.

DANIEL M. FELTS, OF SPARTANBURG, SOUTH CAROLINA.

WASHING-MACHINE.

SPECIFICATION forming part of Letters Patent No. 425,127, dated April 8, 1890.

Application filed November 12, 1887. Serial No. 254,962. (No model.)

To all whom it may concern:

Be it known that I, DANIEL MARRION FELTS, of Spartanburg, in the county of Spartanburg and State of South Carolina, have invented a new and Improved Washing-Machine, of which the following is a full, clear, and exact description.

The object of my invention is to provide a new and improved washing-machine in which the impurities once washed out of the clothing are prevented from returning.

The invention consists in the construction and arrangement of certain parts and details and combinations of the same, as will be fully described hereinafter, and then pointed out in the claims.

Reference is to be had to the accompanying drawings, forming a part of this specification, in which similar letters of reference indicate corresponding parts in all the figures.

Figure 1 is a plan view of my improvement with the top cover removed. Fig. 2 is a longitudinal sectional elevation of the same on the line *x x* of Fig. 3. Fig. 3 is a vertical cross-section of the same on the line *y y* of Fig. 2. Fig. 4 is an enlarged sectional elevation of part of my improvement, and Fig. 5 is an enlarged sectional elevation of the water-inlet funnel.

My improved washing-machine is provided with a boiler A of suitable size and form, and closed on top by a removable cover B, having a funnel C, through which water can be poured into the boiler A. In the ends of the boiler A and the cover B is mounted to rotate a shaft D, provided on one end with a crank-arm E, or other suitable means for turning said shaft D. On the shaft D is secured a perforated cylinder F, which is open at each end and supports a larger cylinder G, provided with perforations in its rim, and with a hinged lid H, which can be closed and fastened by suitable means. The cylinder G contains the clothing to be washed, and said clothing is introduced into the cylinder through the hinged cover or lid H when the lid B of the boiler A is taken off.

The perforated cylinder F projects slightly beyond the ends of the cylinder G, and is provided at each outer end with a flange F′, which opens into a downwardly-extending channel I, formed at each end of the boiler A. The sides of each channel I are slightly curved, as shown in Fig. 3, and said channels I open into compartments J, formed in the bottom of the boiler A, the said compartments extending about two-fifths of the length of the boiler toward the center of said boiler.

The top J′ of each compartment J is inclined downward toward its inner end J^2, which is provided with valves K, hinged at their upper ends and opening into the compartment J. Between the ends J^2 is formed in the boiler A a space L, in which is formed an outlet N, closed by a plug and serving to let the water run out of the boiler A. A funnel O is held on the outside of the boiler A, and leads into the space or the compartment L for the purpose of introducing water into the boiler A. In the bottom of the funnel O is a pivoted valve P, connected with a rod Q, extending upward and through the funnel, and serving for raising the said valve to admit the water to the compartment L from the funnel O. The upper end of the rod Q is guided in a slotted cross-piece R, secured to the funnel O, and is held in place by a spring S, or other suitable device, to prevent the valve P from opening accidentally. A set-screw T, screwing into the funnel O and against the bottom of the valve P, may also be used for opening the valve P, instead of the rod Q.

The cylinder F is provided on its rim with longitudinal ribs or partitions, and similar ribs or partitions G′ are formed on the interior of the rim of the clothing-cylinder G. The boiler A is provided with suitable handles for moving it about.

The operation is as follows: A tubful of strong suds is made, in which the white clothes which are least soiled are steeped a short time and then wrung out, but not too dry. Into the open boiler A a sufficient quantity of said suds is poured to cover the tops of the compartments J. The boiler A is then placed on a fire in a stove or furnace, and then the cylinder G is placed in position in the boiler A. The clothes to be washed have been loosely folded the length of the cylinder G, filling it to about two-thirds or not more than three-fourths of its capacity. The lid H is then closed and the cover B is secured to the boiler A. The water from the space L passes through the valves K into the compartments

J and circulates through the washing-machine in the following manner. By means of the heat from the fire below, the water is expanded in the compartments J, and then the boiling water and steam find their escape upward through the channels I into the perforated cylinder F, and thence into and through the clothes in the cylinder G, which is rotated at the same time by turning the shaft D by means of the crank E. The water, passing through the clothes outward and downward, escapes through the perforations into the boiler below, carrying with it part of the dirt from the clothes in the cylinder G.

It will be seen that the impurities contained in the clothes are washed out into the water of the boiler below, there being sufficient space between the surface of the water in the boiler A and the rim of the revolving cylinder G. The impurities from the clothes are carried by the water and flow in streams from the cylinder G down the inclines J′ into the space L, on the bottom of which said impurities settle. It will be seen that in order to prevent the impurities once washed out of the clothes from passing through them again they must remain in the bottom of the space L. In order to do this, it is necessary that the water used in the washer should be allowed to cool, except in the compartments J, and in no case must the water in the space L be allowed to boil. In order to prevent this boiling of the water in the space L, I use the funnel O, which contains three or four pints of cold water, which is permitted to flow into the boiler A from the space L by opening the valve P.

It is understood that when the shaft D is rotated the cylinders F and G move with it, and the clothes contained in the cylinder G are constantly agitated by the rotary motion of the cylinders F and G, and the longitudinal ribs, with which the said cylinders F and G are provided, aid in washing the clothes by lifting and turning them about without any damage to them by rubbing or tearing. After the clothes have been cleaned the operator removes the plug from the vent N and draws off the water and impurities settled in the bottom of the space L. The water in the funnel O is allowed to run freely from it into the boiler A, and then the vent N is closed, and through the top funnel C is poured enough clear cold water to fill the boiler A well up its sides and around the cylinder G. The cold water thus introduced causes the boiling in the compartments J to cease, and a few turns of the cylinder G partially rinses and cools the clothes and permits their removal from the cylinder G without danger of scalding the hands of the operator. The operator then takes off the cover B, removes the washed clothes from the cylinder G, and puts them in a tub, into which nearly all the clean and warm water is drawn through the vent N. The cylinder G is then again refilled with other and dirtier clothes, which have been soaked in stronger suds, and then the operation is continued, as above described, until the entire washing has been completed without taking the boiler from the fire and without much labor.

Having thus fully described my invention, I claim as new and desire to secure by Letters Patent—

1. In a washing-machine, the combination, with a boiler, of an inlet-funnel fixed in the wall of said boiler, the said inlet-funnel provided with a valve to regulate the flow of water from it, compartments formed in the bottom of said boiler and having inclined tops, said compartments being provided with upwardly-extending channels at their outer ends, and valves formed on the inner ends of said compartments and opening inwardly of said compartments, substantially as shown and described.

2. In a washing-machine, the combination, with a boiler, of an inlet-funnel fixed in the wall of said boiler, a valve pivoted within the funnel near the bottom thereof, the vertical rod Q, connected with said valve, the slotted guide R in the upper part of the funnel, and the spring S, bearing on the rod in opposition to the guide, substantially as shown and described.

DANIEL M. FELTS.

Witnesses:
H. L. FARLEY,
C. C. TWITTY.